# IV - HULL SYSTEMS

(NOTE 1)

TYPE IV. 1

HAND ACTUATOR WITH POSITION INDICATION - OPEN/CLOSE

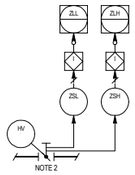


TYPE IV. 2

HYDRAULIC CONTROL VALVE WITH POSITION INDICATION
(DOUBLE ACTION - PARTIAL OPENING)

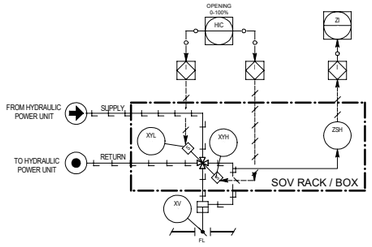


TYPE IV. 3

HYDRAULIC ON/OFF VALVE
(DOUBLE ACTION - FAIL LATCH)

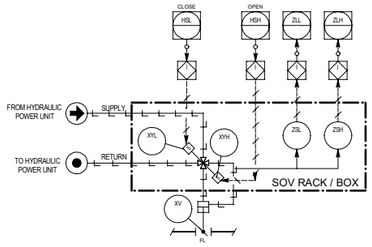


TYPE IV. 4

HYDRAULIC ON/OFF VALVE
(SINGLE ACTION SPRING RETURN - FAIL CLOSE/FAIL OPEN)

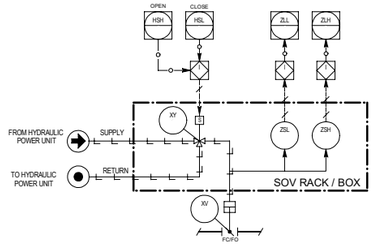


TYPE IV. 5

HYDRAULIC ON/OFF VALVE WITH LOCAL HAND PUMP
(DOUBLE ACTION - FAIL LATCH)

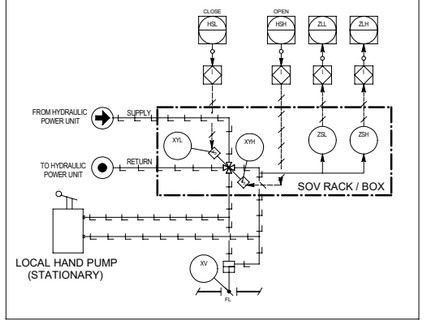


TYPE IV. 6

HYDRAULIC ON/OFF VALVE WITH LOCAL HAND PUMP
(SINGLE ACTION SPRING RETURN - FAIL CLOSE/FAIL OPEN)

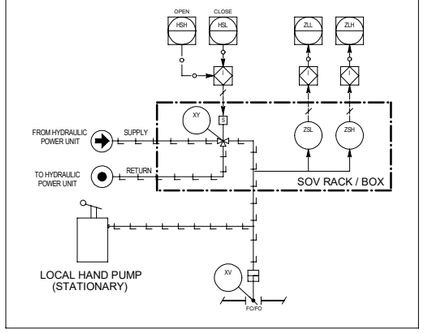


TYPE IV. 7

HYDRAULIC SHUT DOWN VALVE
(SINGLE ACTION SPRING RETURN - FAIL CLOSE)

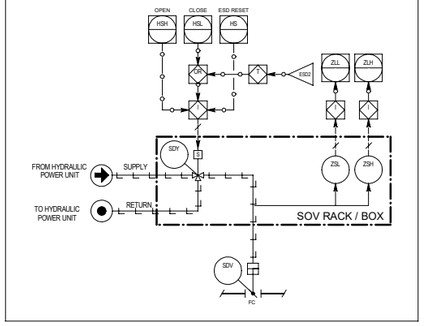


TYPE IV. 8

HYDRAULIC ON/OFF VALVE
(DOUBLE ACTION - FAIL LATCH)

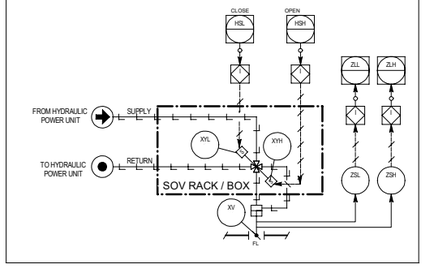


TYPE IV. 9

HYDRAULIC CONTROL VALVE WITH POSITION INDICATION
(SINGLE ACTION SPRING RETURN - FAIL CLOSE/FAIL OPEN)

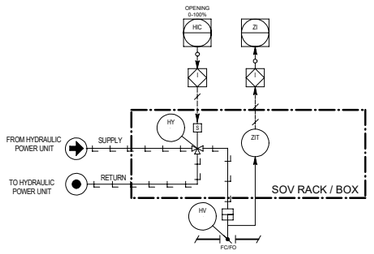


LG - LEVEL GAUGE (REFLEX, TRANSPARENT OR MAGNETIC)

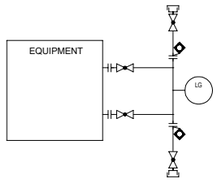


## REFERENCE DOCUMENTS

I-ET-3000.00-0000-940-P4X-002 - SYMBOLS FOR PRODUCTION UNITS DESIGN
I-ET-3000.00-1200-940-P4X-001 - TAGGING PROCEDURE FOR PRODUCTION UNITS DESIGN
I-ET-3010.00-1200-800-P4X-013 - GENERAL CRITERIA FOR INSTRUMENTATION PROJECTS
I-ET-3010.2G-1351-200-KES-401 - PIPING SPECIFICATION FOR HULL
I-MD-3010.2G-1200-940-KES-301 - DESCRIPTIVE MEMORANDUM - HULL SYSTEMS
I-RL-3010.1M-1200-940-P4X-003 - DRAINAGE SYSTEM GUIDELINES

## GENERAL NOTES

1 - ITEM "IV" IS APPLICABLE TO HULL SYSTEMS, EXCEPT HVAC AND SAFETY SYSTEM.
2 - INTERMEDIATE POSITION STATUS IS TO BE INDICATED WHEN THE VALVE IS IN NEITHER THE OPEN NOR CLOSED POSITION. THE APPLICABLE VALVES SHALL BE SHOWN IN INDIVIDUAL P&ID AS A NOTE.

| REV | DESCRIPTION | DATE | DES. | CHECK | APPROV. |
|---|---|---|---|---|---|
| 0 | FOR CONSTRUCTION | 7/27/2021 | EJP.HHI | YCC.HHI | CKW |

INFORMATION IN THIS DOCUMENT IS PROPERTY OF PETROBRAS, BEING PROHIBITED OUTSIDE OF THEIR PURPOSE.
FORM OWNED TO PETROBRAS N-381 REV. L.

Keppel Shipyard / Brasfels
Designer: Doris Engenharia S. A.
SPPIDV2014-DE-3010.2G-1200-944-KES-301_0.pid

CONTRACT: 5900.0117818.21.2
CONTRACT No: -
TECH. RESP.: SHRAVAN KAMAT
CREA No.: -

PETROBRAS — SRGE

CLIENT: E & P

JOB: BUZIOS FIELD AREA DEVELOPMENT

AREA: PETROBRAS 78 (P-78)

TITLE: PIPING AND INSTRUMENT DIAGRAM
GENERAL NOTES - HULL SYSTEM

| DESIGN | KES | DES. | EJP.HHI | CHECK | YCC.HHI | APPROV. | CKW |
|---|---|---|---|---|---|---|---|
| SCALE | NO SCALE | DRAWING | 5900.0117818.21.2 | | | SHEET | 01 of 01 |
| ( 1 ) | | | | ESUP | | | |
| DATE | 7/27/2021 | No. | I-DE-3010.2G-1200-944-KES-301 | | | | |

A0
1189mm X 841mm